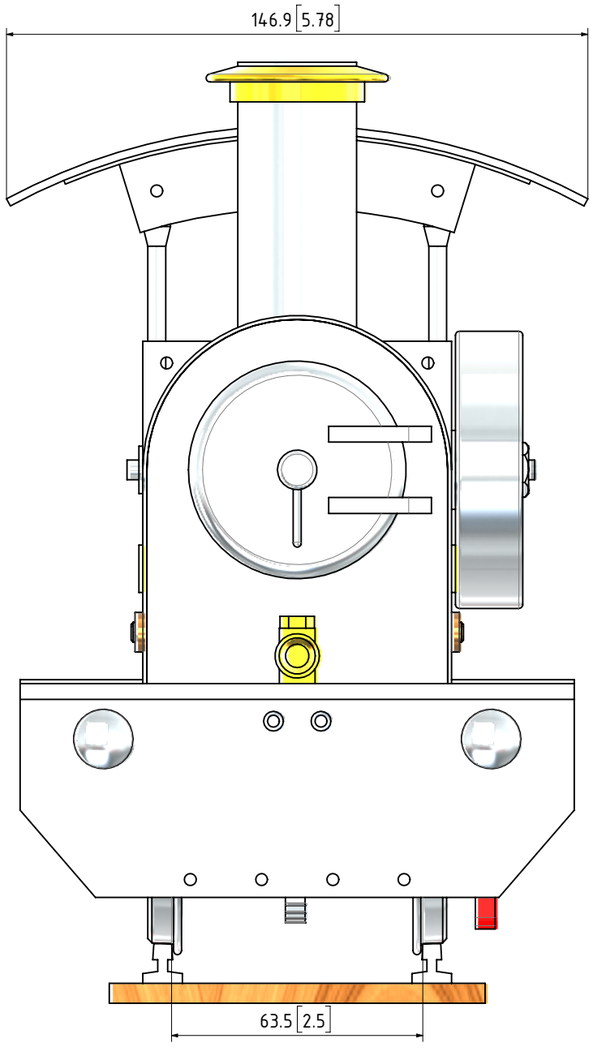

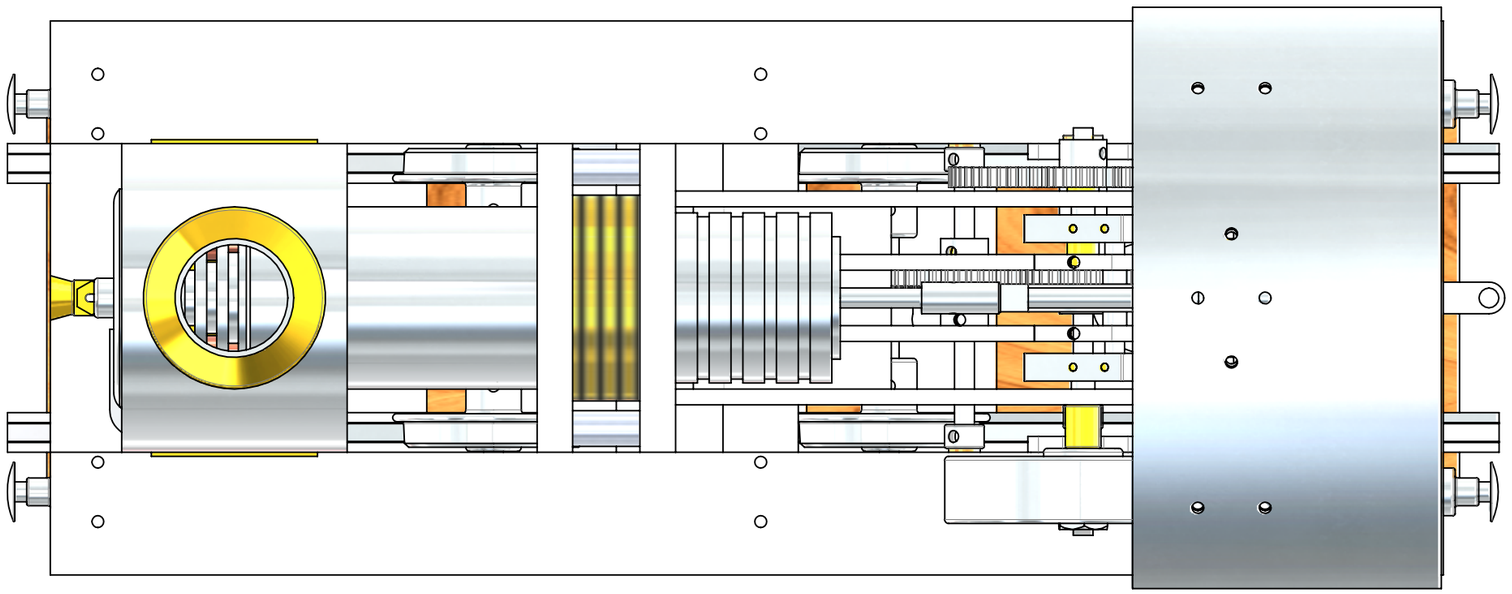

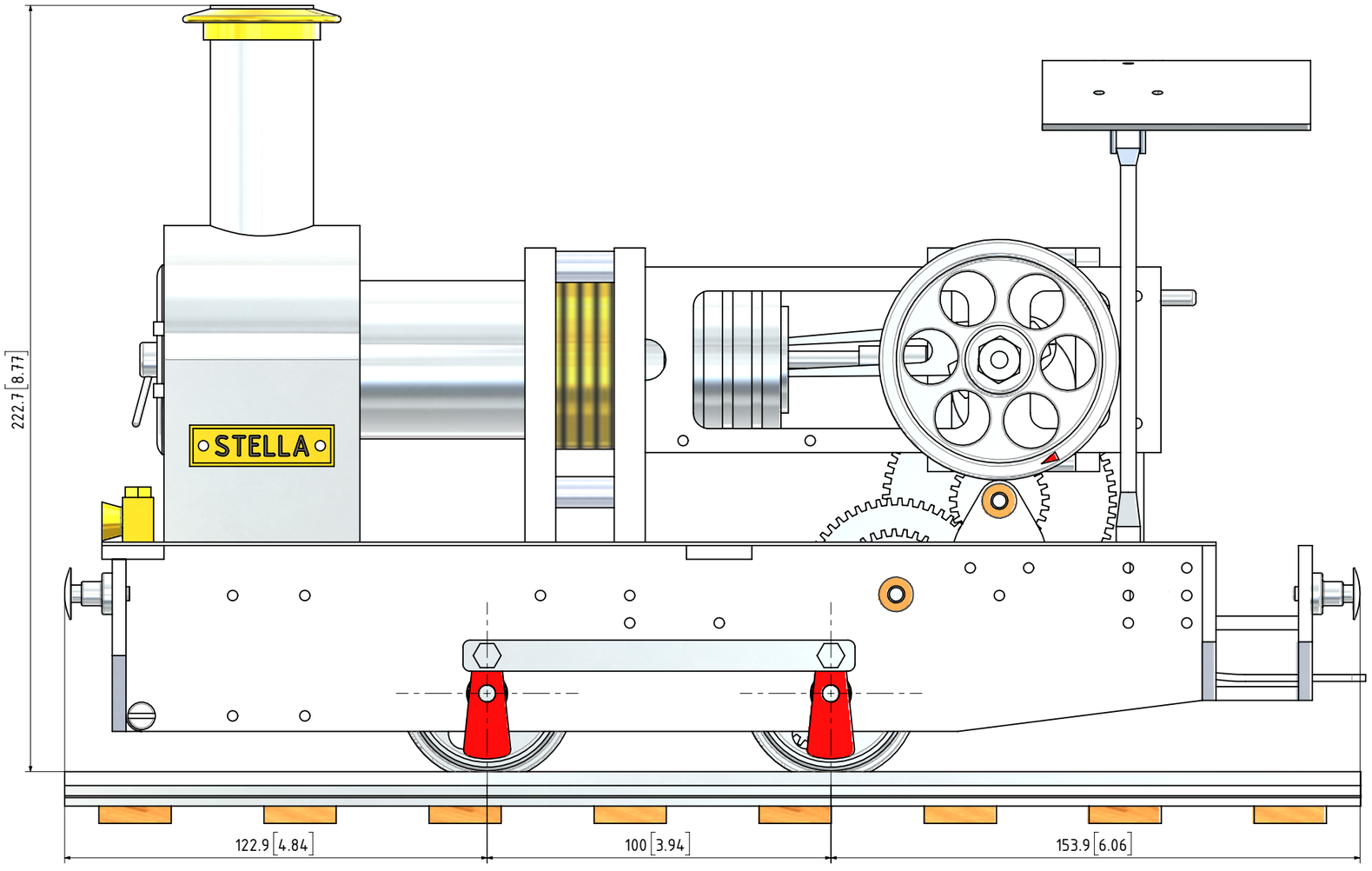

NOTES: THE ORIGINAL DRAWINGS WERE GIVEN TO ME. THE ORIGINAL DRAWINGS AND INSTRUCTION MANUAL WERE BY PETER SCOTT, TITLE "STELLA" A HOT AIR ENGINE POWERED LOCOMOTIVE FOR 45mm GAUGE RAILWAYS." ENGINE SHOWN ON THESE DRWINGS IS FOR 63.5mm/2.5" GAUGE

TITLE

A SIMPLE MODEL LOCOMOTIVE USING A STIRLING ENGINE AS POWER SOURCE

DRAWING CONTENTS

GENERAL ARRANGEMENT

PROJECT No 05A-20-00
JDW DRAUGHTING SERVICES
J.A.M. DE WAAL. 12 BRIGHTWELL STREET PAPAKURA 2110. NEW ZEALAND. PHONE: 0064 09 2988815. MOB: 0211791000 E-MAIL: dewaal@xtra.co.nz.

PROJECTION | JDWDS | MODEL SCALE: 1:1

DATE: JULY 2026 | DWG SCALE: 1:1 @A3 OR AS SHOWN

Copyright © J.A.M. DE WAAL PAPAKURA NZ

SHEET: 01 OF 07 | A3 | No:05A-20-00-SHT-01

DRAWINGS ARE FOR PERSONAL USE ONLY NOT FOR COMMERCIAL PURPOSES

GENERAL NOTES:
0. ALL DRAWINGS ARE IN METRIC MEASUREMENTS
1. ALL ENGINEERING PRACTICES SHALL BE APPLIED WITH REGARDS TO HOLE AND SHAFT TOLERANCES.
2. WHERE SCREWS OR BOLTS ARE USED THE CLEARANCE HOLES SHALL BE APPROXIMATELY 5% TO 8% LARGER THAN THE MATCHING TAPPED HOLE.
3. PREFERABLY ALL TAPPED HOLES AND MATCHING SCREWS AND/OR BOLTS TO BE METRIC FINE (MF)
4. MATERIALS SPECIFIED ON THE DRAWINGS ARE INDICATIVE ONLY. THE BUILDER CAN MAKE HIS/HER OWN MATERIAL CHOICE.
5. ALL CONNECTIONS/JOINTS WHICH HAVE STEAM PRESSURE APPLIED TO IT SHALL BE SILVER/HARD SOLDERED.
6. COMPRESSION SPRINGS ARE DRAWN IN COMPRESSED STATE (CP), UNCOMPRESSED STATE IS APPROX 40% TO 60% LONGER THEN COMPRESSED STATE.
7. WHERE PREFERRED SCREW OR RIVETED CONNECTIONS CAN BE OMITTED AND PARTS CAN BE BONDED TOGETHER BY USING EITHER HIGH STRENGTH GLUE, EPOXY RESIN, OR SOLDER.
8. PARTS WHICH ARE DIRECTLY EXPOSED TO STEAM AND/OR WATER SHOULD BE CONSTRUCTED USING NON-FERROUS OR NON CORROSIVE MATERIAL SUCH AS BRASS, BRONZE, GUNMETAL, STAINLESS STEEL, COPPER OR MONEL.
9. THE ORDER IN WHICH THE PARTS/COMPONENTS ARE MANUFACTURED AND THE MODEL IS ASSEMBLED IS ENTIRELY LEFT TO THE BUILDER/MODEL MAKER.
10. A COLOUR SCHEME FOR THIS PROJECT IS ENTIRELY LEFT UP TO THE MODEL MAKER.
11. THE MANNER IN WHICH THE PARTS/COMPONENTS ARE MANUFACTURED IS ENTIRELY LEFT UP TO THE BUILDER.
12. USE LOCTITE, ON SCREW OR PRESS FIT CONNECTIONS OR SURFACES, WERE DEEMED NECESSARY TO PREVENT PARTS FROM LOOSENING.
13. WASHERS AND/OR SPRING WASHERS SHALL BE USED WHERE DEEMED NECESSARY.
14. USE SEALING GASKETS WERE DEEMED NECESSARY.
15. REMOVE ALL SHARP EDGES
XX. ERRORS AND/OR OMISSIONS MAY OCCUR IN THE DRAWINGS, DO NOT HESITATE TO CONTACT ME SO THAT THE ERRORS/OMISSIONS CAN BE RECTIFIED.

ADDITIONAL NOTES ABOUT THESE DRAWINGS:
1) NO MATERIALS HAVE BEEN SPECIFIED ON THESE DRAWINGS. THE BUILDER TO CHOOSE ITS OWN PREFERRED MATERIAL FOR THE PARTS/COMPONENTS. THE FOLLOWING COLOURS ON THE DRAWINGS INDICATES POSSIBLE MATERIALS WHICH CAN BE USED FOR PARTS: YELLOW=BRASS, LIGHT GREY=ALUMINIUM OR MILD STEEL, REDDISH BROWN=COPPER, DARK BROWN=BRONZE OR GUN METAL, WHITISH=SILVER STEEL OR STAINLESS STEEL
2) FASTENERS.
NO FASTENERS SUCH AS BOLTS, SCREWS, RIVETS, NUTS AND WASHERS HAVE BEEN SHOWN ON THESE DRAWINGS. THE BUILDER TO CHOOSE ITS OWN PREFERRED TYPE OF FASTENERS.

DUE TO THE LACK OF INFORMATION ON THE ORIGINAL DRAWING(S), SUCH AS VIEWS, DIMENSIONS, SECTIONS ETC AND/OR CLARITY OF COMPONENTS, OMITTED PARTS/COMPONENTS, SOME OF THE COMPONENTS MIGHT NOT BE AS CONSTRUCTED ORIGINALLY OR AS THE ORIGINAL DESIGNER INTENDED

QTY.	PART NUMBER
1	05A-20-00-1-01-UNDER FRAME
1	05A-20-00-1-02-MOVABLE FRONT BUFFER BEAM
1	05A-20-00-1-03-SMOKE BOX
1	05A-20-00-1-04-BURNER
1	05A-20-00-1-05-HEAD LAMP
1	05A-20-00-1-06-CANOPY
1	05A-20-00-1-07-CRANK CASE
1	05A-20-00-1-08-POWER CYLINDER+DISPLACER CYLINDER
4	05A-20-00-1-09-BEARING 5x12x5
4	05A-20-00-1-10-BEARING 5x12x4
4	05A-20-00-1-11-BUFFER
2	05A-20-00-2-01-WHEEL SET
2	05A-20-00-2-02-COUPLING ROD
1	05A-20-00-2-03-DISPLACER PISTON+CRANK HOUSING
1	05A-20-00-2-04-CRANKSHAFT
1	05A-20-00-2-05-POWER PISTON
2	05A-20-00-2-06-CON-ROD
1	05A-20-00-2-07-GEAR WHEEL M1-16T
1	05A-20-00-2-08-GEAR WHEEL M1-66T
1	05A-20-00-2-09-GEAR WHEEL M1-27T
1	05A-20-00-2-10-GEAR WHEEL M1-54T
1	05A-20-00-2-11-GEAR WHEEL M1-36T
1	05A-20-00-2-12-GEAR WHEEL M1-33T
1	05A-20-00-M64mm-RAIL

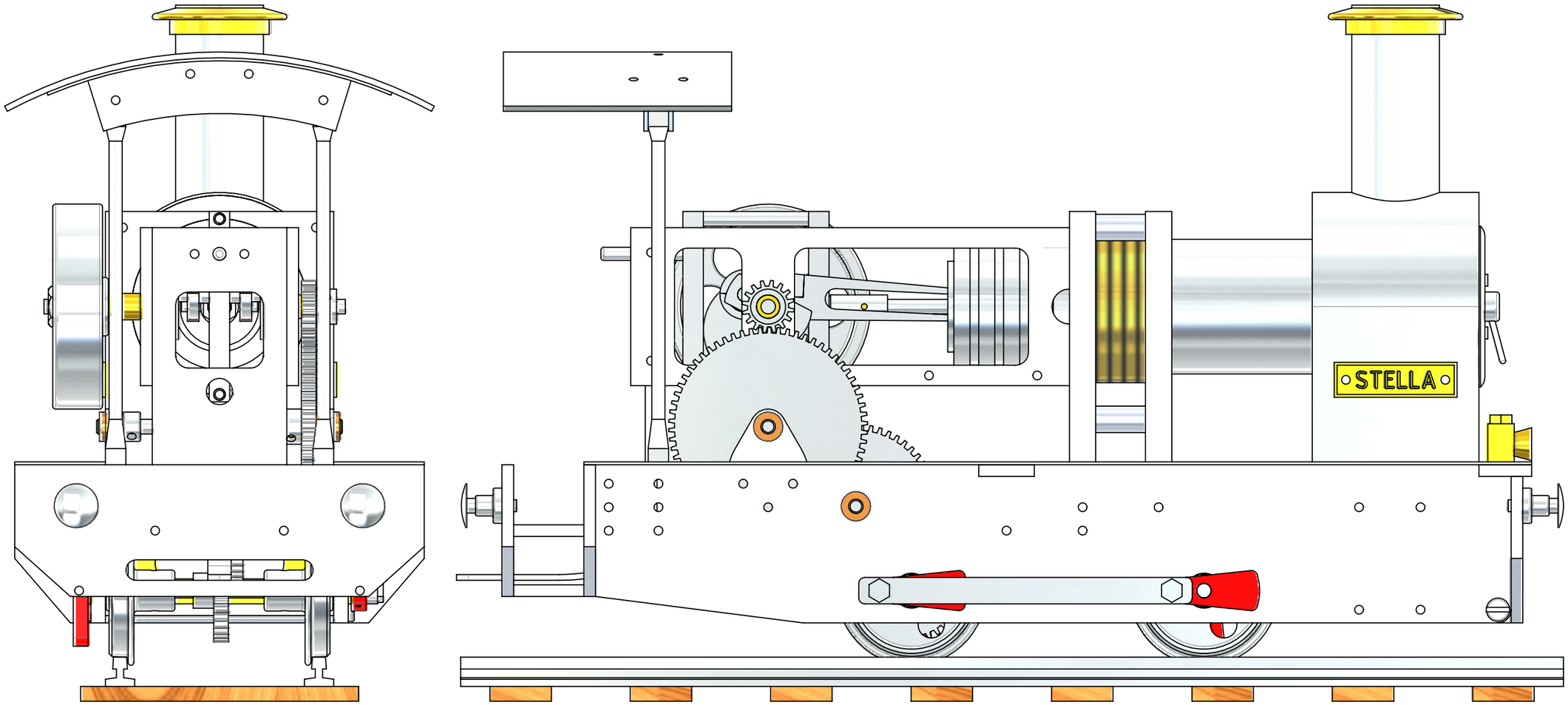

OTHER ABBREVIATIONS
AS = AS SHOWN
DP = DEEP
DAA= DRILL AFTER ASSEMBLY
D&TAA= DRILL AND TAP AFTER ASSEMBLY
CF = CLOSE FIT (SIZE FOR SIZE)
PF = PRESS FIT
PFAA= PRESS FIT AFTER ASSEMBLY
PCD = PITCH CIRCLE DIAMETER
RM = REAM
HEX = HEXACON, 6SIDED
CP = COMPRESSED
KNL = KNURLED
CSK = COUNTERSINK
PL = PLACES
DWL= DOWEL
SPF= SPOTFACE
(T)HESOP=(TAPPED)HOLES EQUALLY SPACED ON PCD
(T)HESOC=(TAPPED)HOLES EQUALLY SPACED ON CIRCUMFERENCE
OD = OUTSIDE DIAMETER
ID = INSIDE DIAMETER
MAX/MIN = CRITICAL DIMENSION
SA-xxx = SUB ASSEMBLY-xxx

NOTES: THE ORIGINAL DRAWINGS WERE GIVEN TO ME. THE ORIGINAL DRAWINGS AND INSTRUCTION MANUAL WERE BY PETER SCOTT, TITLE "STELLA" A HOT AIR ENGINE POWERED LOCOMOTIVE FOR 45mm GAUGE RAILWAYS." ENGINE SHOWN ON THESE DRWINGS IS FOR 63.5mm/2.5" GAUGE

TITLE
A SIMPLE MODEL LOCOMOTIVE USING A STIRLING ENGINE AS POWER SOURCE

DRAWING CONTENTS
GENERAL ARRANGEMENT, NOTES, BILL OF MATERIALS

JDW DRAUGHTING SERVICES
J.A.M. DE WAAL. 12 BRIGHTWELL STREET PAPAKURA 2110. NEW ZEALAND. PHONE: 0064 09 2988815. MOB: 0211791000 E-MAIL: dewaal@xtra.co.nz.

PROJECT No 05A-20-00
PROJECTION
JDWDS
MODEL SCALE: 1:1
DWG SCALE: 1:1 @A3 OR AS SHOWN
DATE JULY 2026
Copyright © J.A.M. DE WAAL PAPAKURA NZ
SHEET: 02 OF 07
A3
No:05A-20-00-SHT-02

DRAWINGS ARE FOR PERSONAL USE ONLY NOT FOR COMMERCIAL PURPOSES

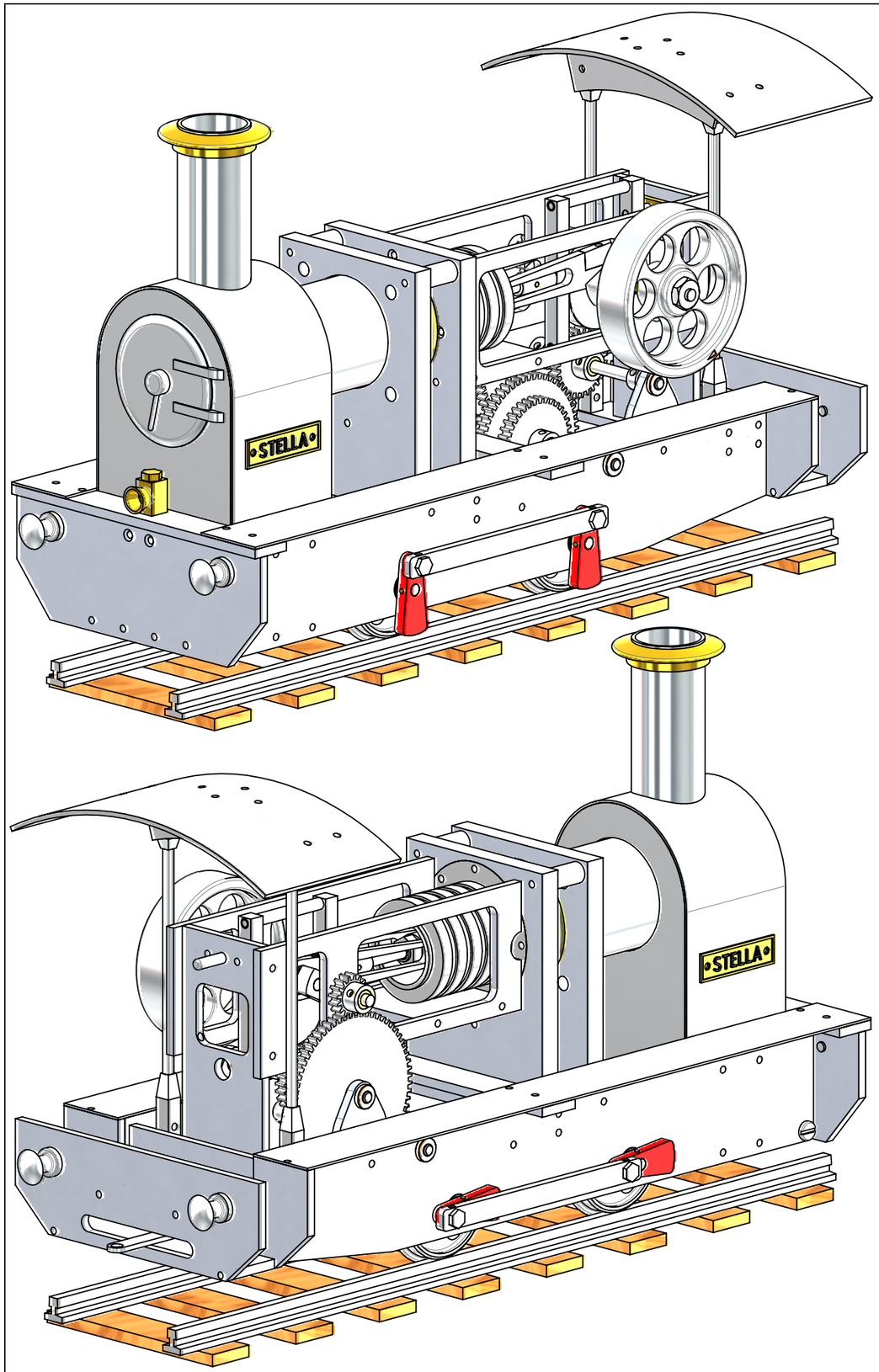

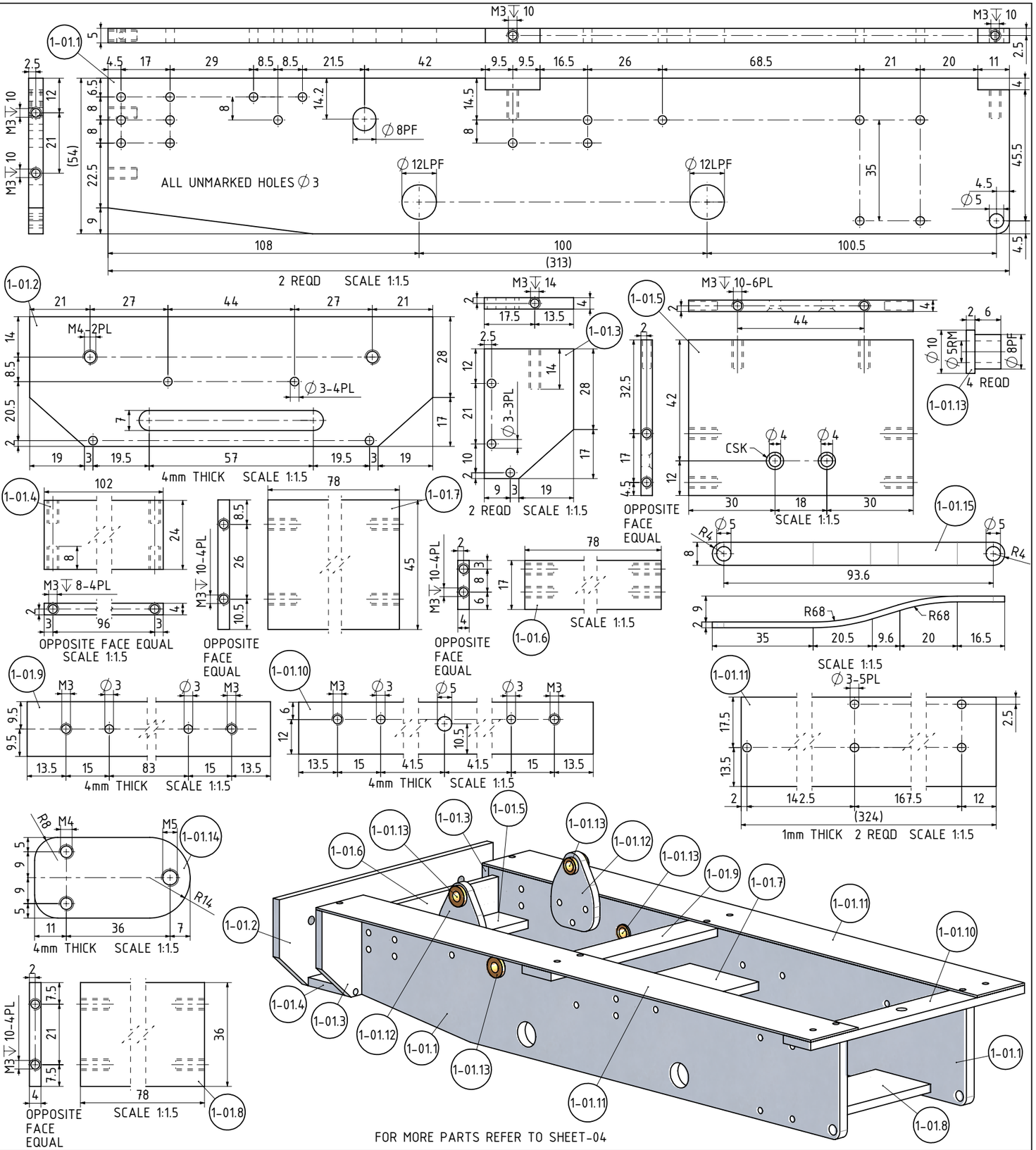

NOTES: THE ORIGINAL DRAWINGS WERE GIVEN TO ME. THE ORIGINAL DRAWINGS AND INSTRUCTION MANUAL WERE BY PETER SCOTT, TITLE "STELLA" A HOT AIR ENGINE POWERED LOCOMOTIVE FOR 45mm GAUGE RAILWAYS." ENGINE SHOWN ON THESE DRWINGS IS FOR 63.5mm/2.5" GAUGE

TITLE

A SIMPLE MODEL LOCOMOTIVE USING A STIRLING ENGINE AS POWER SOURCE

DRAWING CONTENTS

ISOMETRIC VIEWS, PARTS AND ASSEMBLIES

PROJECT No 05A-20-00
JDW DRAUGHTING SERVICES
J.A.M. DE WAAL. 12 BRIGHTWELL STREET PAPAKURA 2110. NEW ZEALAND. PHONE: 0064 09 2988815. MOB: 0211791000 E-MAIL: dewaal@xtra.co.nz.

PROJECTION JDWDS
DATE JULY 2026
SHEET: 03 OF 07

MODEL SCALE: 1:1
DWG SCALE: 1:1 @A3 OR AS SHOWN
Copyright © J.A.M. DE WAAL PAPAKURA NZ
A3 No:05A-20-00-SHT-03

DRAWINGS ARE FOR PERSONAL USE ONLY NOT FOR COMMERCIAL PURPOSES

1-01.12
1-01.15
4mm THICK 2 REQD
SCALE 1:1.5
SECTION SCALE 1:2
1-02.1
4mm THICK SCALE 1:1.5
1-02.2
OPPOSITE FACE EQUAL
1-02.3
2 REQD
1-03.1
SCALE 1:2
1-03.2
4mm THICK 2 REQD
1-03.3
1mm THICK SCALE 1:2
1-03.4
1mm THICK SCALE 1:2
1-03.5
SCALE 1:2
1-03.6
1-03.7
1-03.8
1-03.9
1-03.6
SCALE 1:1.5
1-03.7
2 REQD
16-INSIDE
41-INSIDE
SCALE 1:1.5
1-04.1
1-04.2
1mm THICK 2 REQD
SCALE 1:1.5
1-04.3
1-04.4
TUBE ∅9x8
2 REQD SCALE 1:1.5
FILLER AND VENT
WICK MATERIAL
1-04.5
1-04.6
AFTER SOLDERING THE LIQUID CONTAINER SHOULD BE LEAK PROOF
1-05
1-06.1
2 REQD
1-06.2
2 REQD
1-06.3
1-06.4
1-06.5
1-06.6
1-06.7
1.5mm THICK 2 REQD SCALE 1:1.5
1-06.7
1-07.1
1-07.2
SCALE 1:1.5
1-07.3
1-07.4
1-07.5
1-07.6
3 REQD
1-07.7
3mm THICK
FOR MORE PARTS REFER TO SHEET-05

NOTES: THE ORIGINAL DRAWINGS WERE GIVEN TO ME. THE ORIGINAL DRAWINGS AND INSTRUCTION MANUAL WERE BY PETER SCOTT, TITLE "STELLA" A HOT AIR ENGINE POWERED LOCOMOTIVE FOR 45mm GAUGE RAILWAYS." ENGINE SHOWN ON THESE DRWINGS IS FOR 63.5mm/2.5" GAUGE

TITLE
A SIMPLE MODEL LOCOMOTIVE USING A STIRLING ENGINE AS POWER SOURCE

DRAWING CONTENTS
PARTS AND ASSEMBLIES

PROJECT No 05A-20-00
JDW DRAUGHTING SERVICES
J.A.M. DE WAAL. 12 BRIGHTWELL STREET PAPAKURA 2110. NEW ZEALAND. PHONE: 0064 09 2988815. MOB: 0211791000 E-MAIL: dewaal@xtra.co.nz.

PROJECTION
JDWDS
DATE
JULY 2026

MODEL SCALE: 1:1
DWG SCALE: 1:1 @A3 OR AS SHOWN
Copyright © J.A.M. DE WAAL PAPAKURA NZ
SHEET: 04 OF 07
A3
No:05A-20-00-SHT-04

DRAWINGS ARE FOR PERSONAL USE ONLY NOT FOR COMMERCIAL PURPOSES

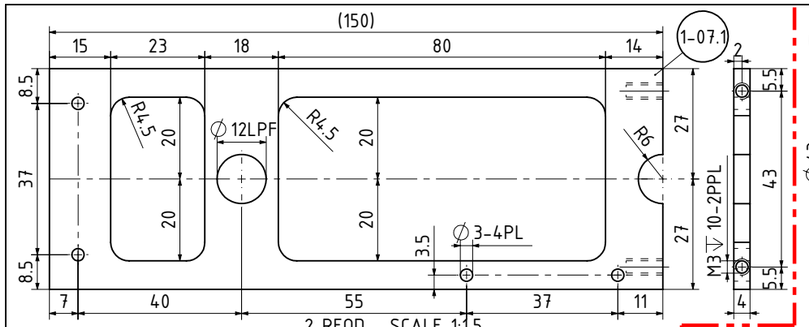

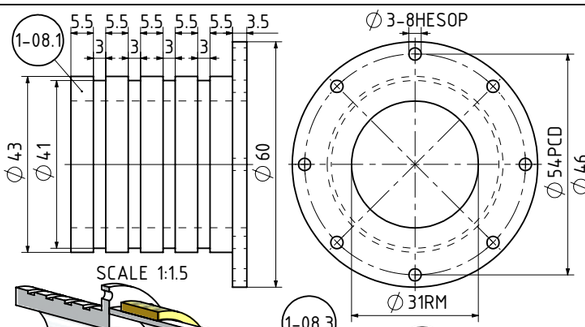

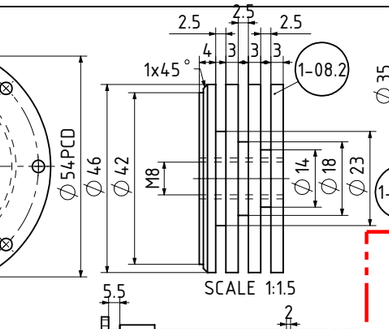

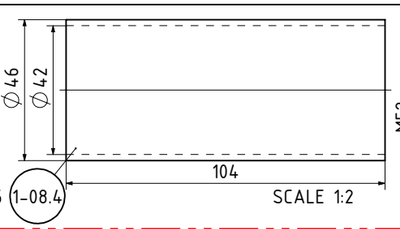

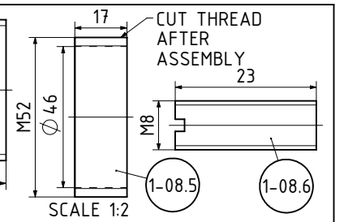

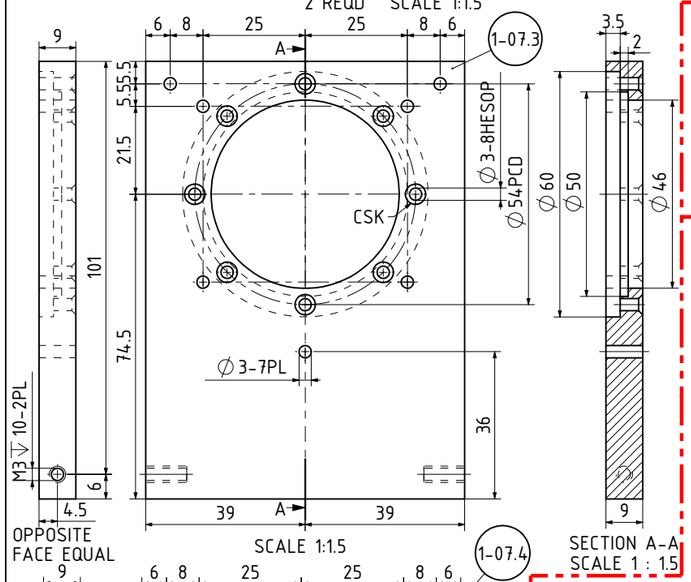

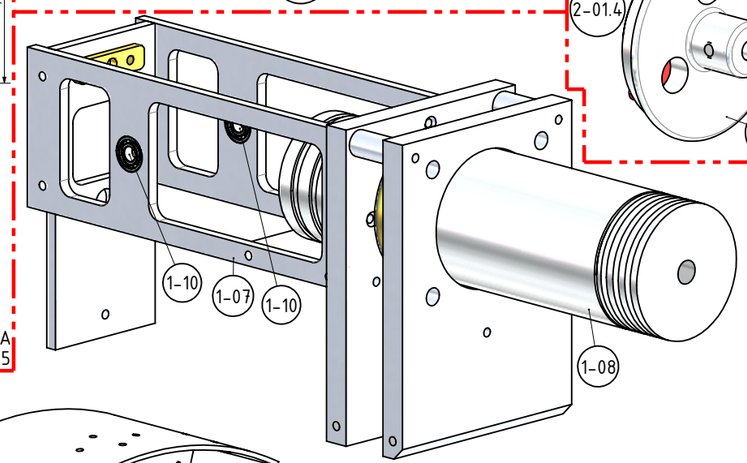

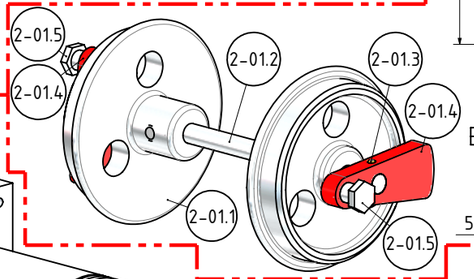

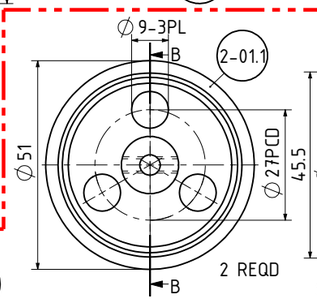

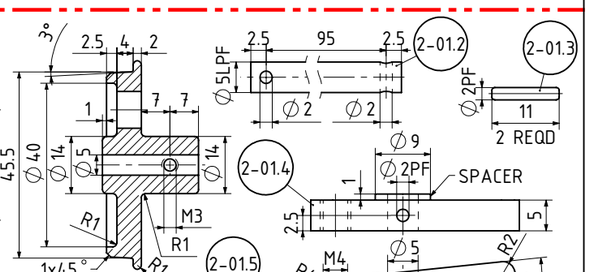

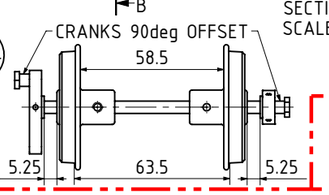

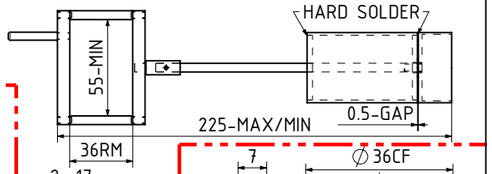

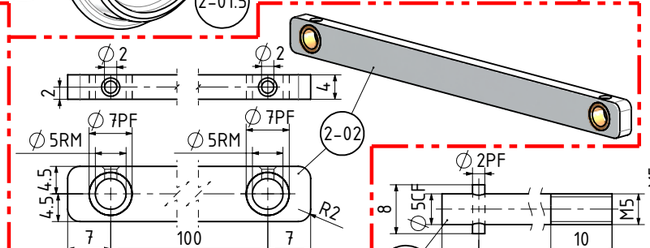

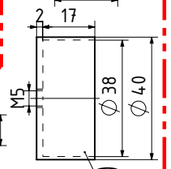

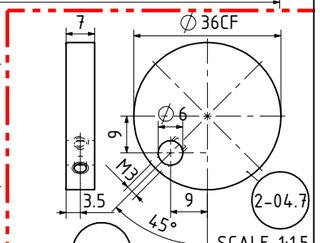

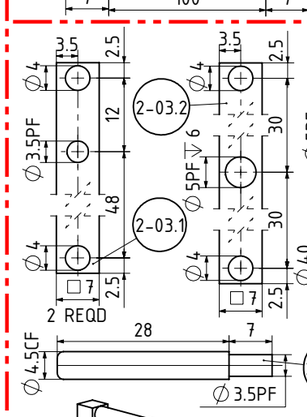

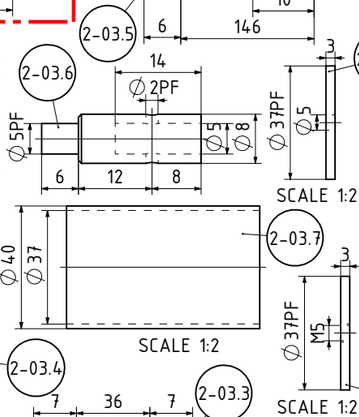

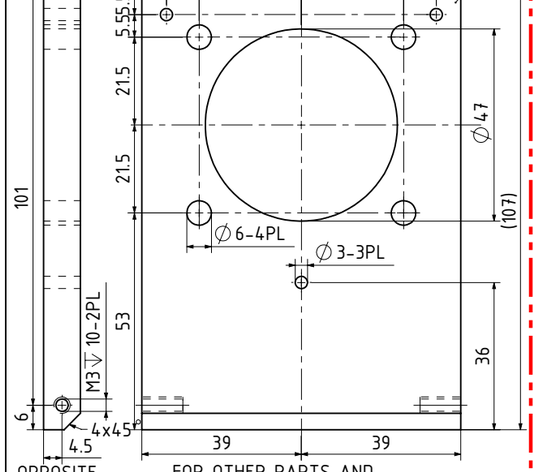

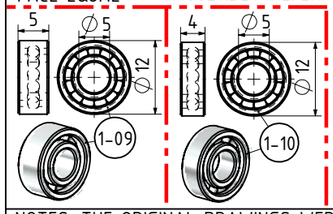

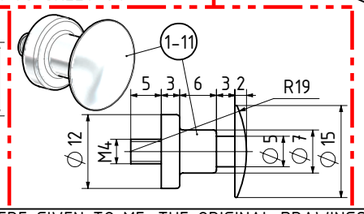

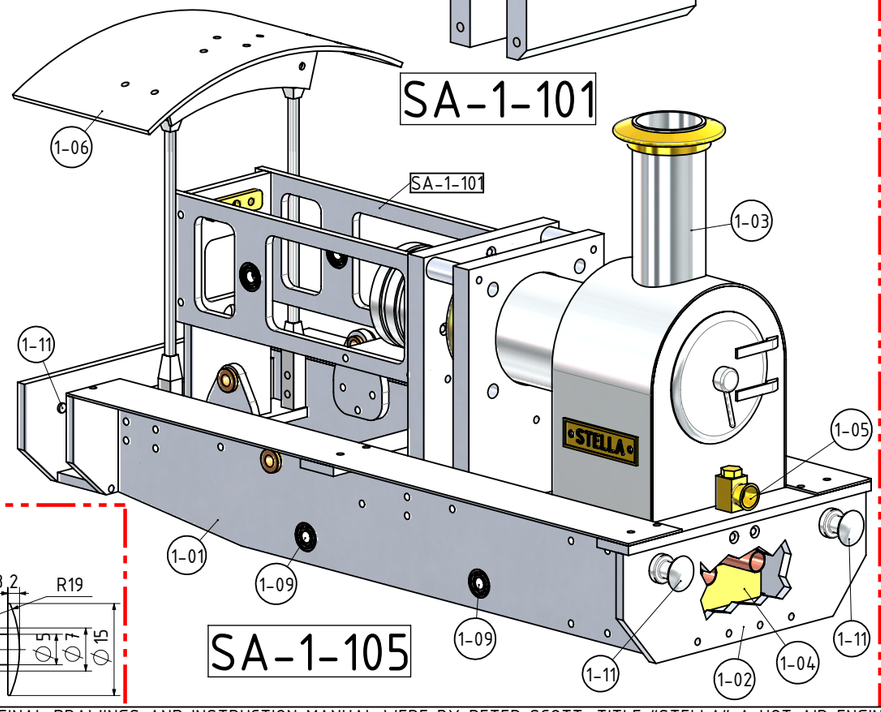

NOTES: THE ORIGINAL DRAWINGS WERE GIVEN TO ME. THE ORIGINAL DRAWINGS AND INSTRUCTION MANUAL WERE BY PETER SCOTT, TITLE "STELLA" A HOT AIR ENGINE POWERED LOCOMOTIVE FOR A 45mm GAUGE RAILWAYS." ENGINE SHOWN ON THESE DRWINGS IS FOR 63.5mm/2.5" GAUGE

TITLE

A SIMPLE MODEL LOCOMOTIVE USING A STIRLING ENGINE AS POWER SOURCE

DRAWING CONTENTS

PARTS AND ASSEMBLIES

PROJECT No 05A-20-00

JDW DRAUGHTING SERVICES

J.A.M. DE WAAL. 12 BRIGHTWELL STREET PAPAKURA 2110. NEW ZEALAND. PHONE: 0064 09 2988815. MOB: 0211791000 E-MAIL: dewaal@xtra.co.nz.

PROJECTION | JDWDS | MODEL SCALE: 1:1

DATE JULY 2026 | DWG SCALE: 1:1 @A3 OR AS SHOWN

Copyright © J.A.M. DE WAAL PAPAKURA NZ

SHEET: 05 OF 07 | A3 | No:05A-20-00-SHT-05

DRAWINGS ARE FOR PERSONAL USE ONLY NOT FOR COMMERCIAL PURPOSES

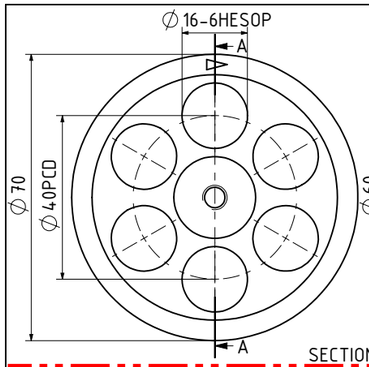

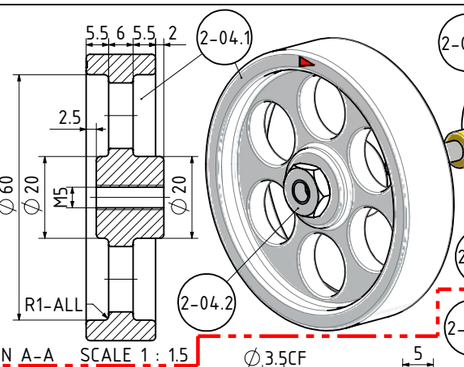

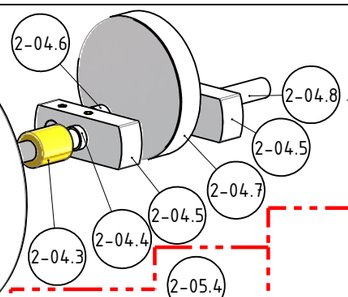

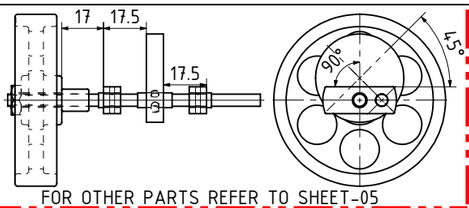

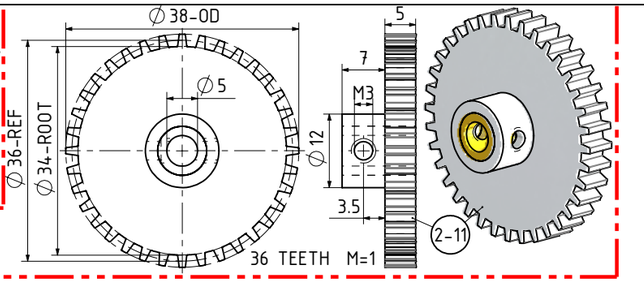

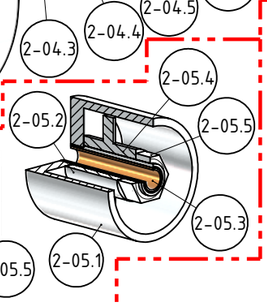

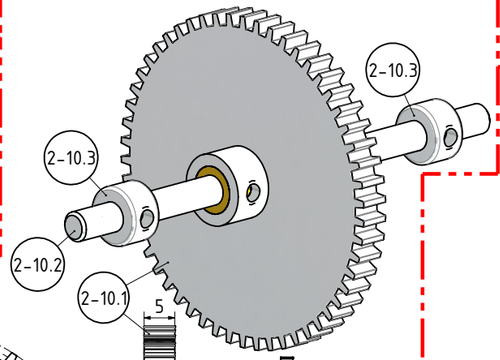

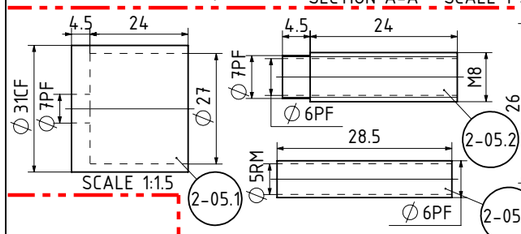

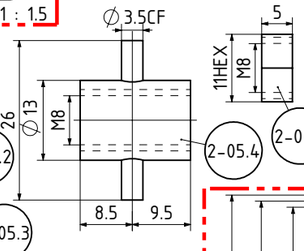

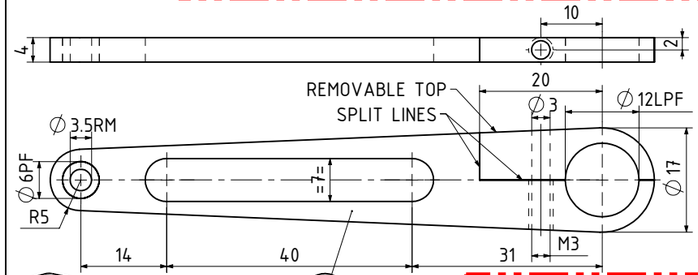

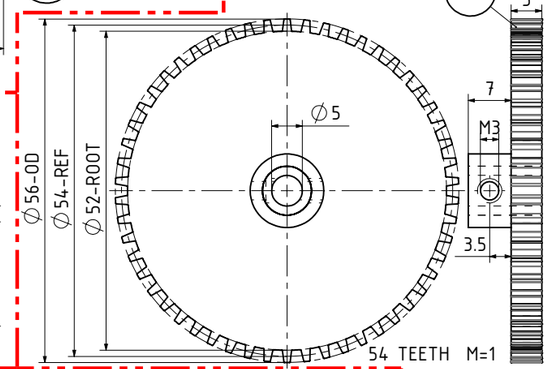

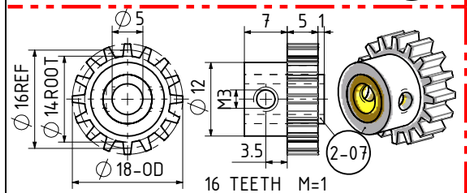

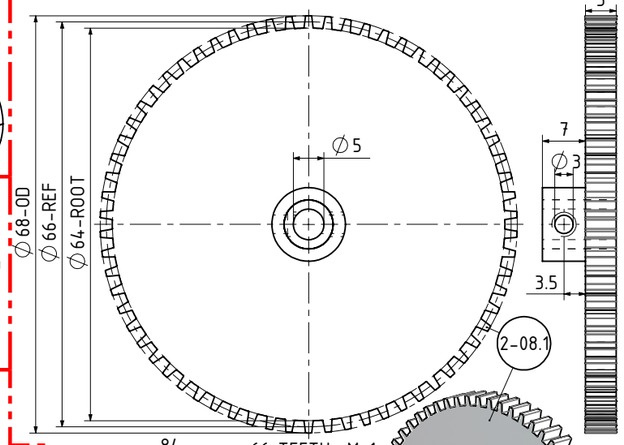

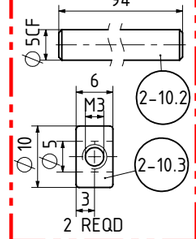

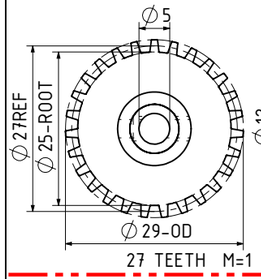

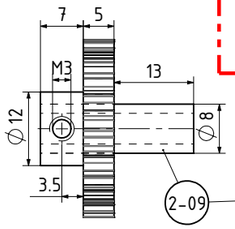

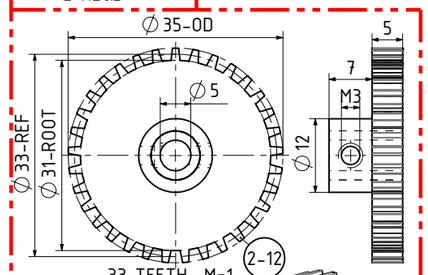

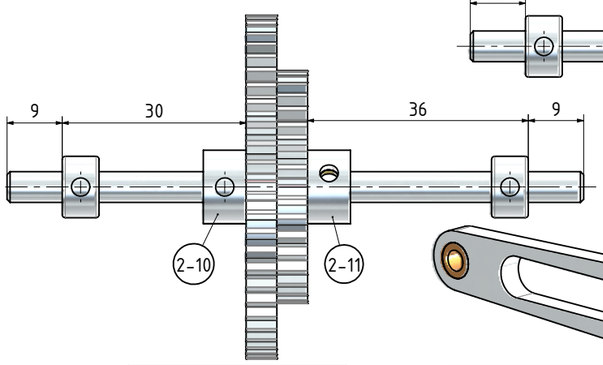

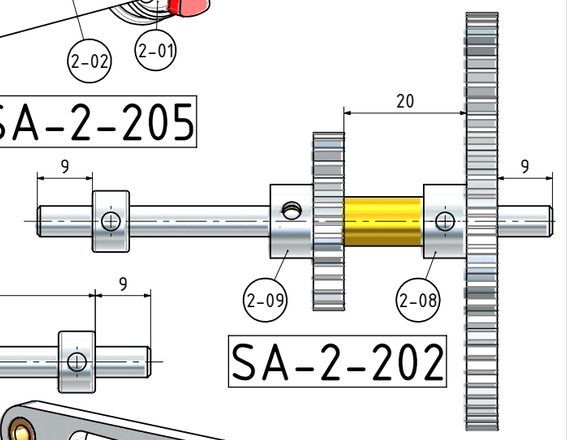

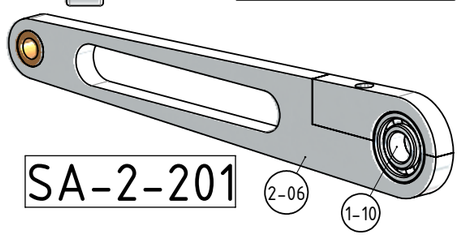

SA-2-203

GENERAL NOTE: ALL THE GEAR WHEELS SHOWN ON THESE DRAWINGS HAD A STANDARD CENTER HOLE OF ⌀8mm. A BUSH IS NEEDED TO REDUCE THE CENTER HOLE TO ⌀5 THE BUSH SOULD BE PRESS FITTED

NOTES: THE ORIGINAL DRAWINGS WERE GIVEN TO ME. THE ORIGINAL DRAWINGS AND INSTRUCTION MANUAL WERE BY PETER SCOTT, TITLE "STELLA" A HOT AIR ENGINE POWERED LOCOMOTIVE FOR 45mm GAUGE RAILWAYS." ENGINE SHOWN ON THESE DRWINGS IS FOR 63.5mm/2.5" GAUGE

TITLE
A SIMPLE MODEL LOCOMOTIVE USING A STIRLING ENGINE AS POWER SOURCE

DRAWING CONTENTS
PARTS AND ASSEMBLIES

PROJECT No 05A-20-00
JDW DRAUGHTING SERVICES
J.A.M. DE WAAL. 12 BRIGHTWELL STREET PAPAKURA 2110. NEW ZEALAND. PHONE: 0064 09 2988815. MOB: 0211791000 E-MAIL: dewaal@xtra.co.nz.

PROJECTION | JDWDS | MODEL SCALE: 1:1
DATE JULY 2026 | DWG SCALE: 1:1 @A3 OR AS SHOWN
Copyright © J.A.M. DE WAAL PAPAKURA NZ
SHEET: 06 OF 07 | A3 | No:05A-20-00-SHT-06

DRAWINGS ARE FOR PERSONAL USE ONLY NOT FOR COMMERCIAL PURPOSES

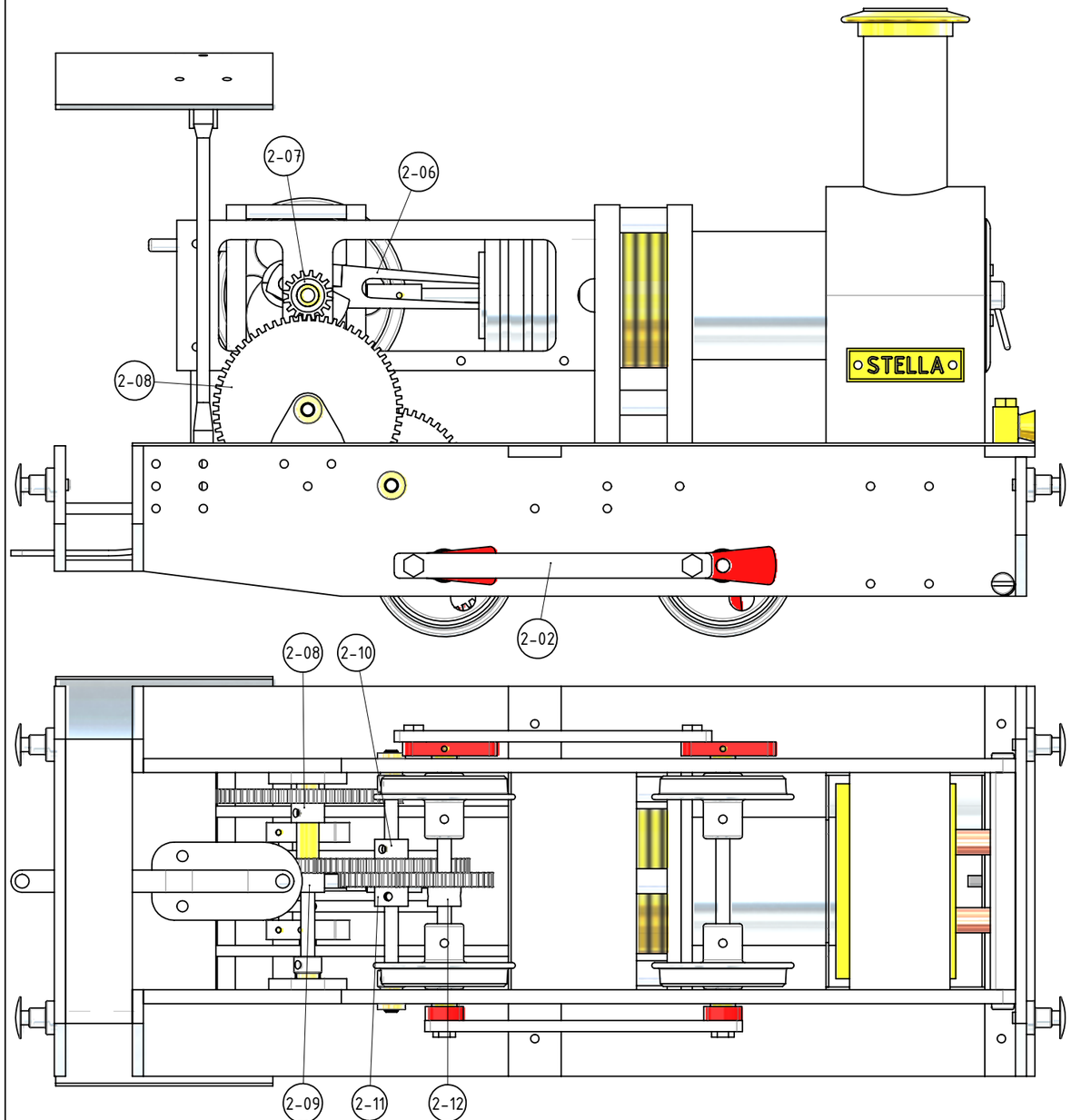

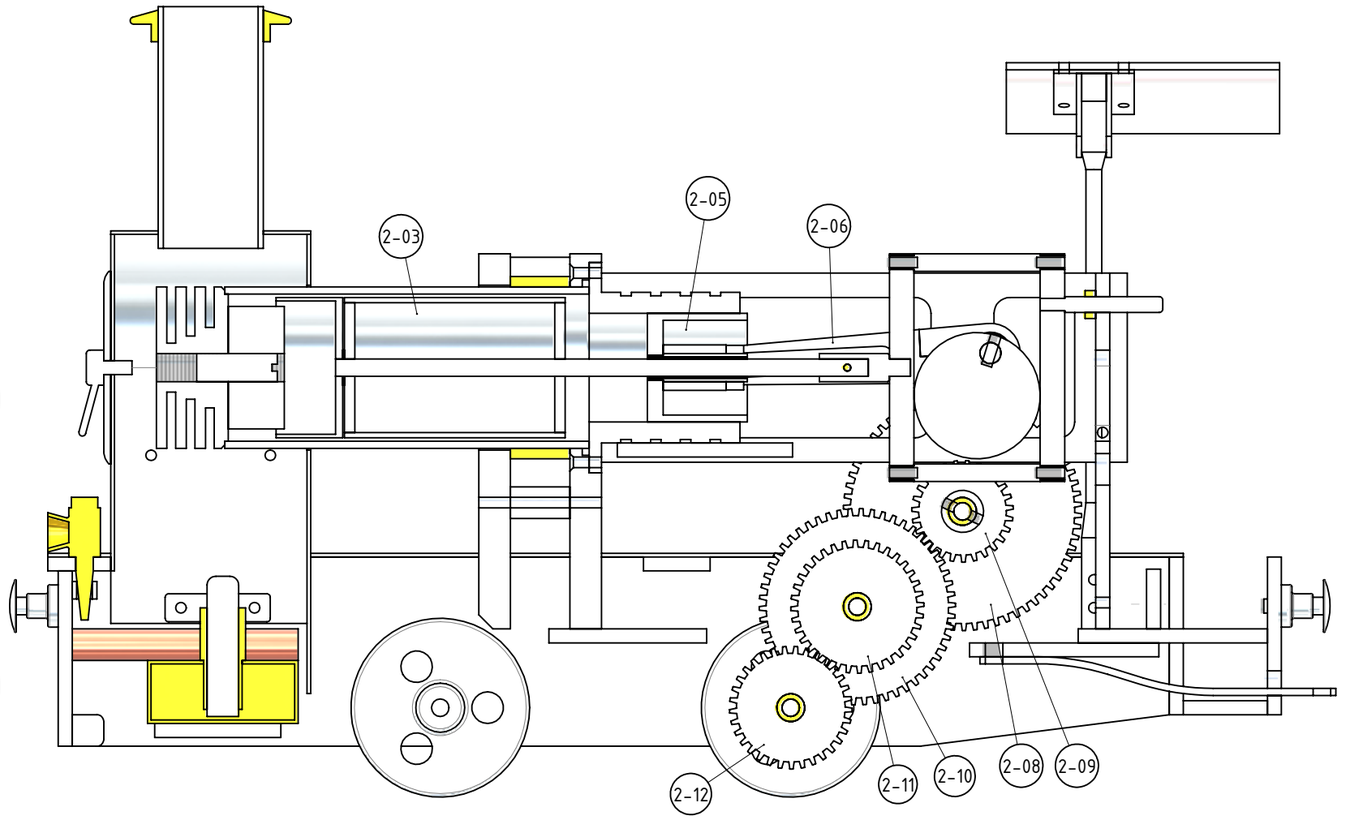

NOTES: THE ORIGINAL DRAWINGS WERE GIVEN TO ME. THE ORIGINAL DRAWINGS AND INSTRUCTION MANUAL WERE BY PETER SCOTT, TITLE "STELLA" A HOT AIR ENGINE POWERED LOCOMOTIVE FOR 45mm GAUGE RAILWAYS." ENGINE SHOWN ON THESE DRWINGS IS FOR 63.5mm/2.5" GAUGE

TITLE

A SIMPLE MODEL LOCOMOTIVE USING A STIRLING ENGINE AS POWER SOURCE

DRAWING CONTENTS

VIEWS AND SECTION

PROJECT No 05A-20-00

JDW DRAUGHTING SERVICES

J.A.M. DE WAAL. 12 BRIGHTWELL STREET PAPAKURA 2110. NEW ZEALAND. PHONE: 0064 09 2988815. MOB: 0211791000 E-MAIL: dewaal@xtra.co.nz.

PROJECTION JDWDS

DATE JULY 2026

SHEET: 07 OF 07

MODEL SCALE: 1:1

DWG SCALE: 1:1 @A3 OR AS SHOWN

Copyright © J.A.M. DE WAAL PAPAKURA NZ

A3 No:05A-20-00-SHT-07

DRAWINGS ARE FOR PERSONAL USE ONLY NOT FOR COMMERCIAL PURPOSES